Current part is item (9) on diagram. Available at www.oshkoshequipment.com


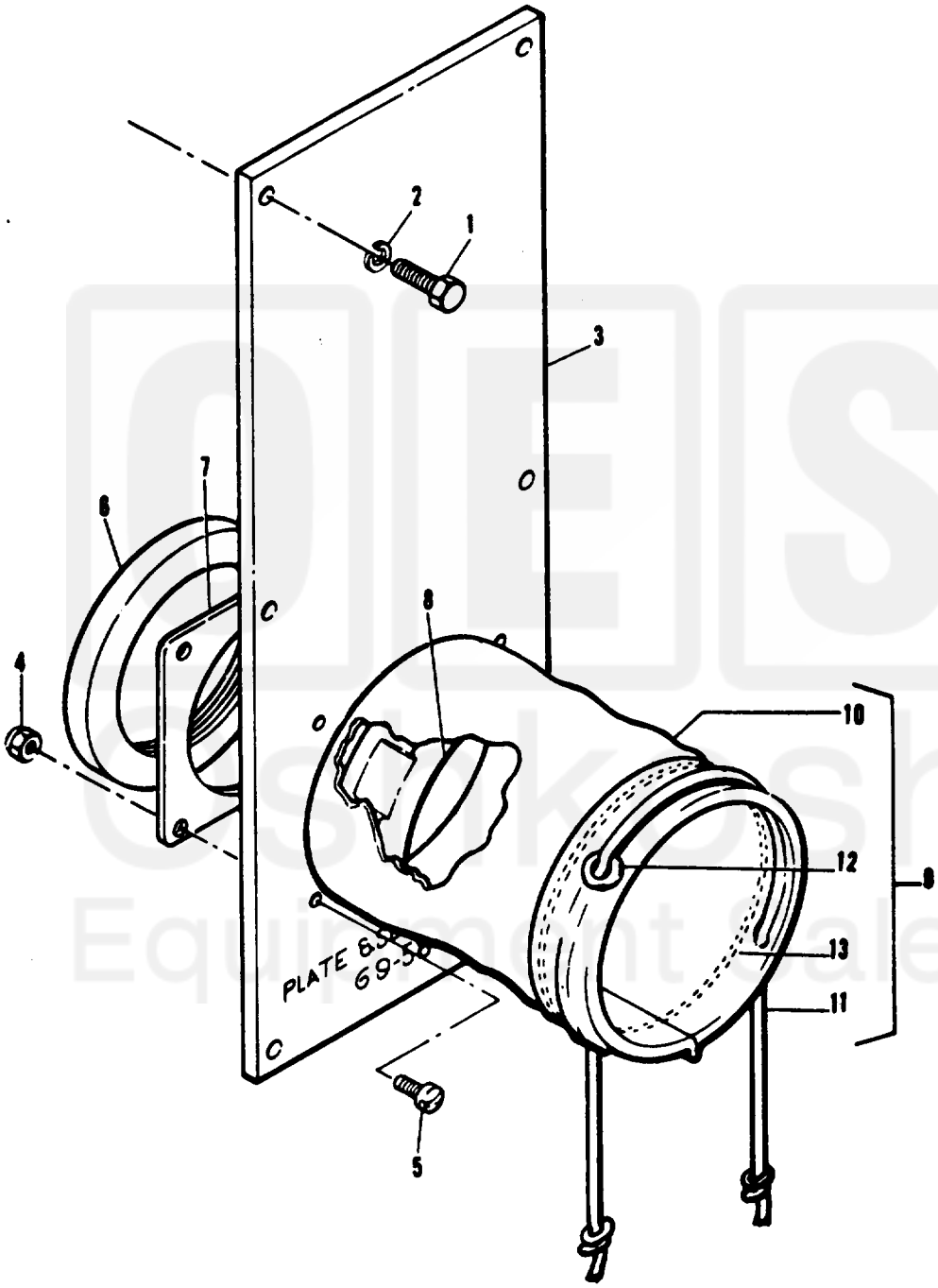


Figure 5. Plate and Sleeve Assembly

Current part is item (9) on diagram. Available at www.oshkoshequipment.com

Current part is item (9) on diagram. Available at www.oshkoshequipment.com

| (1) ILLUSTRATION A FIG. NO. | B ITEM NO. | (2) SMR CODE A ARMY | B AIR FORCE | C NAVY | D USMC | (3) A SSI | B REPL FACTOR | (4) NATIONAL STOCK NUMBER | (5) DESCRIPTION REF NUMBER & MFR CODE | USABLE ON CODE | (6) U/M | (7) QTY INC IN UNITS | (8) USMC QTY PER EQUIP |
|---|---|---|---|---|---|---|---|---|---|---|---|---|---|
| | | | | | | | | | GROUP 05-PLATE AND SLEEVE ASSEMBLY | | | | |
| 5 | 1 | PAOZZ | PAOZZ | PAOZZ | | D | .008 | 5305-00-068-0500 | SCREW, CAP, HEXAGON HEAD: PLATE MTG<br>MS90725-3 96906 | | EA | 6 | |
| 5 | 2 | PAOZZ | PAOZZ | PAOZZ | | D | .010 | 5310-00-582-5965 | WASHER, LOCK: SLEEVE PLATE MTG<br>MS35338-44 96906 | | EA | 6 | |
| 5 | 3 | XBOZZ | AFO | PAGZZ | | | | 6115-00-033-6623 | PLATE, SLEEVE<br>69-580 30554<br>30554-69-580 36024 | | EA | 1 | |
| 5 | 4 | PAOZZ | PAOZZ | PAGZZ | | D | .008 | 5310-00-052-3632 | NUT, WASHER: PLATE COVER MTG<br>69-561-3 30554<br>511-081800-00 78189 | | EA | 4 | |
| 5 | 5 | PAOZZ | PAOZZ | XBGZZ | | D | .008 | 5305-00-984-6193 | SCREW, MACHINE: PLATE COVER MTG<br>MS35206-245 96906 | | EA | 4 | |
| 5 | 6 | XBOZZ | MFO | XBGZZ | | | | | PLATE, RETAINER<br>69-583 30554<br>30554-69-583 36024 | | EA | 1 | |
| 5 | 7 | XBOZZ | MFO | ZBGZZ | | | | | PLATE, COVER<br>69-581 30554<br>30554-69-581 36024 | | EA | 1 | |
| 5 | 8 | XBOZZ | PAOZZ | XBGZZ | | | | 5970-00-097-9798 | BUSHING, INSULATION<br>69-570-3 30554<br>1-3-0 95277 | | EA | 1 | |
| 5 | 9 | PAOZZ | PAOZZ | XBGZZ | | D | .030 | 5975-00-421-6952 | SLEEVE, DUST AND MOISTURE<br>69-582 30554<br>30554-69-582 36024 | | EA | 1 | |
| 5 | 10 | XAOZZ | XBO | XBGZZ | | | | | CLOTH, COATED: SLEEVE<br>MILC20696 81349<br><br>TYPEICLAS | | EA | V | |
| 5 | 11 | XAOZZ | XB | XBOZZ | | | | | CORD, COTTON<br>MILR670TYPE 81349<br>4CLASS2 | | EA | V | |
| 5 | 12 | XAOZZ | XB | XBOZZ | | | | | GROMMET, METALLIC:SLEEVE<br>MILG16491 81349<br>TYPEICLAS | | EA | 4 | |
| 5 | 13 | XAOZZ | XB | XBGZZ | | | | | THREAD, POLYESTER<br>VT285TYPEII 81349<br>CLASS1 | | EA | V | |



Current part is item (9) on diagram. Available at www.oshkoshequipment.com